Trivium

Level II Energy Audit

Submission Date: 9/16/2016

plug smart™

intelligent energy solutions

Table of Contents

1.0 EXECUTIVE SUMMARY 3

2.0 SITE ENERGY CONSUMPTION 5

3.0 BACKGROUND INFORMATION 6

3.1 Description of the Client 6

3.2 Description of the Level II Audit 6

3.3 Project Cost Estimations and Implementation of ECMs 6

4.0 BUILDING OVERVIEW 7

5.0 UTILITY ANALYSIS 8

5.1 Electricity Usage Analysis 9

5.2 Natural Gas Usage Analysis 10

6.0 ENERGY CONSERVATION MEASURES 11

6.1 Interior LED Lighting 12

6.2 Exterior LED Lighting 13

6.3 HVAC Upgrade 14

6.4 Domestic Hot Water Heater Update 17

6.6 Envelope Upgrades 19

APPENDICES 21

A. Glossary of Terms 21

B. Exterior Lighting Inventory 24

1.0 Executive Summary

Trivium Development LLC is interested in using energy efficiency to renovate the currently unoccupied building at 350 W. Wilson Bridge Road through Property Assessed Clean Energy (PACE) Financing. This energy audit is unique in that it establishes energy baselines for the building through an eQuest energy model. The savings from the recommendations are determine by making changes to the eQuest model. These savings can then be used to determine what is eligible for PACE financing.

This report details the projected savings of and technical approach toward implementing the proposed energy conservation measures (ECMs). Data was collected on the existing building shell as well as the proposed renovations beginning in August 2016. This data is then used to build the eQuest model so different energy saving recommendations could be examined. A summary of the ECM's and their financials are shown in the table on the following page. It was Plug Smart's goal to ensure that the recommended renovations maximize the customer's return on investment.

The proposed project would require a total investment of $300 thousand with the potential for $37 thousand per year in energy savings. This includes $31 thousand in electricity savings (314 thousand kWh/year) and $6 thousand in natural gas savings (921 mmBtu). After $37 thousand in rebate monies1 and including $11 thousand in operation and maintenance savings per year, this equates to a 5.4 year simple payback. The project would reduce the energy spend of the building by 49.8%. Table 1.1 summarizes Plug Smart's findings.

[1] Pending Utility Approval

ECM #	ECM Description	ECM Price	Rebates	Electricty Savings		Annual Gas Savings		Total Utility Savings			% of Total Utility	Annual O&M	Total Savings	Simple Payback w/Rebate & O&M	Simple Payback w/Rebate & w/o O&M	Simple Payback w/o Rebate & O&M
				$	kWh	$	mmBTU	$	mmBTU	Tons CO2						
1	Interior LED Lighting	$ 113,950	$ 11,014	$ 18,770	188,450	$ (1,619)	(245)	$ 17,151	398.4	117.0	10.0%	$ 5,145	$ 22,296	4.6	6.0	6.6
2	Exterior LED Lighting	$ 54,143	$ 4,433	$ 7,735	77,657	$ -	-	$ 7,735	265.0	53.5	6.6%	$ 2,320	$ 10,055	4.9	6.4	7.0
3	HVAC Upgrade	$ 79,988	$ 22,521	$ 6,975	70,030	$ 4,452	672	$ 11,427	911.4	83.9	22.8%	$ 3,428	$ 14,855	3.9	5.0	7.0
4	DHW Upgrade	$ 576	$ -	$ -	-	$ 82	12	$ 82	12.4	0.7	0.3%	$ 25	$ 107	5.4	7.0	7.0
5	Envelope Upgrade	$ 51,344	$ -	$ (2,146)	(21,550)	$ 3,181	481	$ 1,035	407.0	10.6	10.2%	$ 310	$ 1,345	38.2	49.6	49.6
		$ 300,000	$ 37,968	$ 31,333	314,587	$ 6,096	921	$ 37,429	1,994	266	49.8%	$ 11,229	$ 48,658	5.4	8.0	8.0

Table 1.1. Energy Conservation Measure Financial Analysis

2.0 Site Energy Consumption

Before making recommendations, it is important to fully understand site energy usage and utility billing. Payback and financial savings are the driving factors behind energy projects, both of which require a detailed understanding of energy spend. In this case, the baseline energy usage is derived from the eQuest building model. eQuest is a U.S. Department of Energy energy simulation software that is used to measure the performance of buildings in terms of thermal efficiency and energy usage.[2] Figure 2.1 below shows a one-year summary of electric and natural gas usage as modeled by eQuest. The baseline eQuest model was based off equipment that existed in the building and ASHRAE building codes. The commercial electric rate is estimated to be $0.0996/kW and the natural gas rate is estimated to be $6.62/mmBtu; These rates are based on the Ohio average commercial utility rates for 2015.

Trivium PACE	Total Square Footage:		53,000 ft2						
	Electricity			Natural Gas			Total		
	Total Spend	kWh	$/kWh	Total Spend	MMBTU	$/MMBTU	$	kBTU/ft2	$/ft2
12 Mo. Prior	$ 88,948	893,050	$ 0.10	$ 6,325	955	$ 6.62	$ 95,273	75.5	$ 1.798

Table 2.1. A 12 Month Estimated Utility Summary for 350 W. Wilson Bridge Road

[2] http://www.doe2.com/equest/

3.0 Background Information

The Level II Energy Audit will guide the owner's decision-making in planning for energy efficiency and conservation measures while achieving reductions in energy consumption and carbon dioxide emission levels.

3.1 Description of the Client

Trivium Development LLC was established in 2008 as an Ohio developer that focuses on the long term value for all stakeholders. Based in Columbus, Ohio Trivium's team has a combined 80 years experience that offers services including site evaluation and acquisition, entitlement, approvals, financing, equity placements, construction management, and more.[3] Trivium purchased the property at 350 W. Wilson Bridge Road earlier in 2015 with the plans to renovate the building for a medical complex.

3.2 Description of the Level II Audit

A Level II audit consists of a detailed analysis of building energy systems including Building Envelope, Lighting, Heating, Ventilation and Air Conditioning, Plug Loads, and Compressed Air. Compared to a Level I Audit, a Level II audit includes a more in depth energy breakdown as well as a more in depth walkthrough. Also, a list of potential ECM's with their costs and associated savings are presented to the customer. A Level II audit may include energy modeling and/or energy monitoring to provide a better understanding of energy using equipment.

3.3 Project Cost Estimations and Implementation of ECMs

The prices and costs for a Level II Energy Audit are for budgetary pricing only and can potentially vary dependent upon final engineering, final material and subcontractor bids, scope of work and/or other identified issues. These prices and costs were developed based on information provided by Trivium.

Furthermore, it should be noted that the data and recommendations presented herein represent a specific window in time. The savings estimates and project pricing have been derived based on the data that was gathered during the study period. This information is valid for approximately 6 months before pricing will need to be reevaluated.

[3] http://www.triviumdevelopment.com/?page_id=18

4.0 Building Overview

The building located at 350 W. Wilson Bridge Road in Worthington, Ohio, is a 3-floor, 53,200 ft^2 office building. The building is currently being prepared for major renovations and has been stripped to its shell. In order to establish a baseline and determine energy savings from energy conservation measures (ECMs), we created baseline and proposed eQuest models. For the baseline eQuest model, we assume the building was originally heated and cooled via rooftop units (RTUs) equipped with DX, R-22 coils and natural gas heat. We also assumed the building was predominantly lit by T8 linear fluorescent fixtures that produce a lighting power density of approximately 1.9 Watts per square foot as per ASHRAE guidelines from the time period before the building was stripped to its shell. A summary of eQuest model inputs is shown in Figure 4.2. The parking lot is currently lit by type 5 metal halide lighting fixtures, HID bollards, and HID flood lights.

Figure 4.1: 350 W. Wilson Bridge Rd.

	Existing Baseline Building Model	Proposed Building Model
Roof	U-0.063	U-0.043
Exterior Walls	U-0.124	U-0.058
Windows/Skylights	U-0.56, SHGC-0.35	U-0.30, SHGC-0.74
Occupancy	15 SF/person lobby, 100 SF/person offices	15 SF/person lobby, 100 SF/person offices
Airside HVAC System	DX coils with furnace heat - RTU units Cooling: Supply cfm sized by software based on 53 degree supply air and 73 degree space temperature setpoint Heating: Supply cfm sized by software based on 90 degree supply air and 70 degree space temperature setpoint Default ventilation rates by space occupancy types in eQuest: overall 0.155 cfm/SF (21% OA) Fan Power: 1.25 EXT. S.P. ("WG)	Water source heat pumps with two condensing boilers and fluid cooler with dedicated outside air unit Cooling: Supply cfm sized by software based on 53 degree supply air and 73 degree space temperature setpoint Heating: Supply cfm sized by software based on 90 degree supply air and 70 degree space temperature setpoint Default ventilation rates by space occupancy types in eQuest: overall 0.155 cfm/SF (62% OA) Fan Power: 0.25 EXT. S.P. ("WG)
Domestic Hot Water	Standard 150 gallon gas water heater	100 gallon condensing gas water heater
Interior Lighting	1.90 W/sf	1.01 W/sf
Exterior Lighting	30.57 kW	12.84 kW

Figure 4.2: eQuest Model Summary .

5.0 Utility Analysis

Before making energy efficiency recommendations, it is important to fully understand the utility billing and usage. Payback and financial savings are the driving factor behind energy projects. Determining accurate financial savings requires a detailed understanding of energy spend as well as overall use. In order to establish a baseline, we modeled the building using energy simulation software, eQuest because the building is unoccupied and has been stripped to its shell. The baseline eQuest model was based off knowledge of equipment that existed in the building and ASHRAE building codes. The commercial electric rate is estimated to be $0.0996/kWh and the natural gas rate is estimated to be $6.62/mmBtu; These rates are based on the Ohio average commercial utility rates for 2015.

Understanding which utility makes up the majority of the usage and spend is also important. The pie charts in Figure 5.1 below show the breakout of natural gas versus electricity usage and spend based on our baseline eQuest model. Electricity makes up 76% of the facility's energy usage, but 93% of the spend. This means that electricity is more expensive per unit of energy. Figure 5.2 shows the difference in the unit costs. According to our estimates, electricity is over four times more than natural gas.

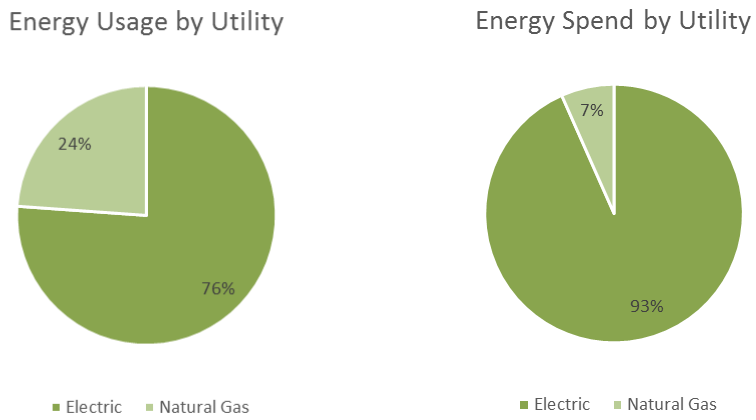

Figure 5.1: Facility Energy Usage and Spend by Energy Source

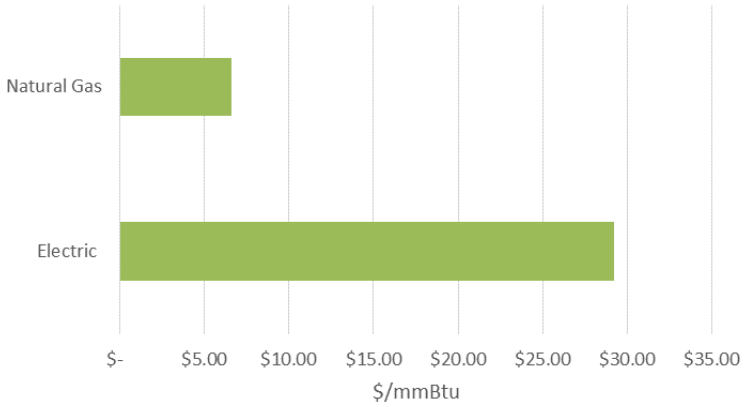

Figure 5.2: A comparison of the cost of electricity versus natural gas

5.1 Electricity Usage Analysis

One year of modeled electricity usage for 350 W. Wilson Bridge Road from the eQuest model is shown below in Figure 5.3.

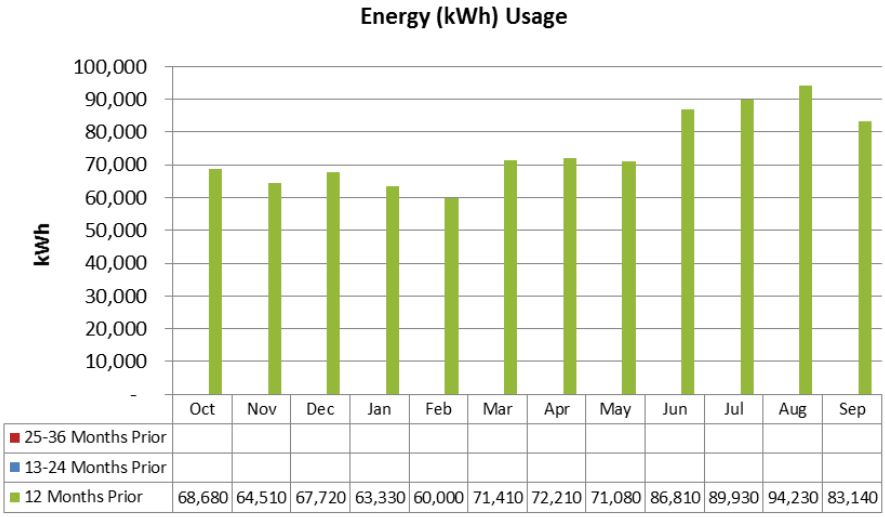

Figure 5.3: Monthly Historical kWh Usage

Figure 5.4 below shows the modeled, monthly electricity consumption for the 350 W. Wilson Bridge Road plotted against monthly average outdoor air temperature with a 3-parameter fit. This model accounts for relatively flat electricity consumption throughout the year, with an increase in the warmer months as air conditioning needs rise. Below the change-point temperature of 65 °F outdoor air temperature electricity stays around 67,848 kWh per month; baseline energy usage is indicated by the green highlighted area. Above the change-point temperature electricity usage increased by about 2,465 kWh per degree Fahrenheit per month; cooling energy usage is indicated by the blue highlighted area.

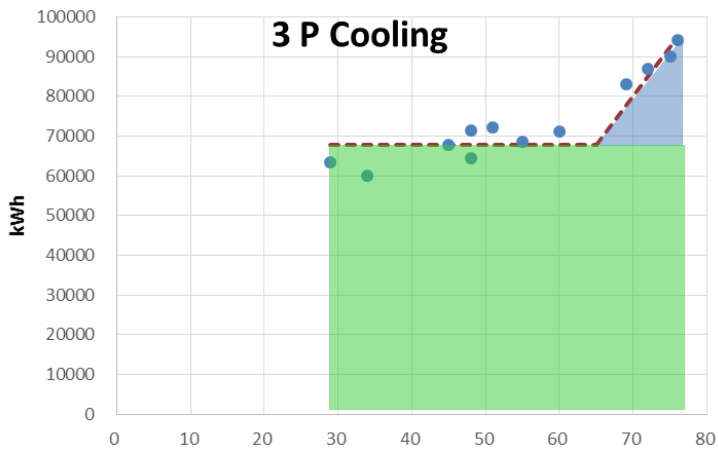

Figure 5.4: Monthly Electricity Usage against Outdoor Air Temperature with 3-Parameter Fit

The model has an R^2 value of 0.87, indicating that 87% of the data can be predicted by the model. Therefore, weather is a good predictor of modeled energy usage.

5.2 Natural Gas Usage Analysis

One year of modeled natural gas usage for 350 W. Wilson Bridge Road from the eQuest model is shown below in Figure 5.5.

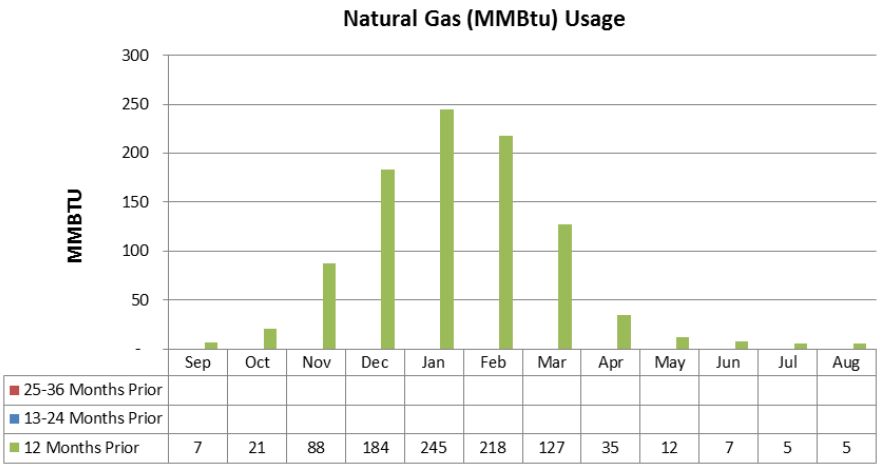

Figure 5.5: Monthly Historical Gas Usage in MMBTU

Figure 5.6 below shows modeled, monthly natural gas consumption for 350 W. Wilson Bridge Road plotted against monthly average outdoor air temperature with a 3-parameter fit. This model accounts for relatively flat natural gas consumption throughout the year, with an increase in the cooler months as heating needs rise. Below the change-point temperature of 59 °F outdoor air temperature natural gas stays around 7 mmBtu per month; baseline energy usage is indicated by the green highlighted area. Below the change-point temperature natural gas usage increased by about 9 mmBtu per degree Fahrenheit per month; heating energy usage is indicated by the red highlighted area.

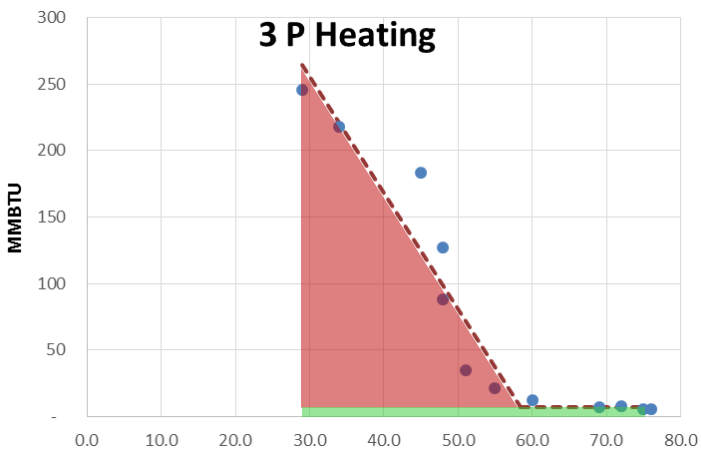

Figure 5.6: Monthly Gas Usage against Outdoor Air Temperature

The model has an R^2 value of 0.93, indicating that 93% of the data can be predicted by the model. Weather is a good predictor of energy usage.

6.0 Energy Conservation Measures

The Energy Conservation Measures (ECMs) presented in the following sections do not account for interactive effects of the ECMs; if all ECMs were implemented, the total savings would be different than the separate calculated savings for each ECM. We performed an eQuest model with all ECMs implemented to determine the interactive effects on energy savings; the results of the total proposed ECMs are shown in the table below:

Table 6.1: eQuest Total Proposed Model Results

	Electricity (kWh/year)	Natural Gas (mmBtu/year)
Baseline	893,060	955.43
Total Proposed	606,330	139.9

Note that the synergistic energy savings would be lower than the summation independent savings. The utility cost savings would be $33,957 per year which equates to 35.6% of the baseline energy usage. Figures 6.2 and 6.3 shown the modeled usage for the baseline and proposed models.

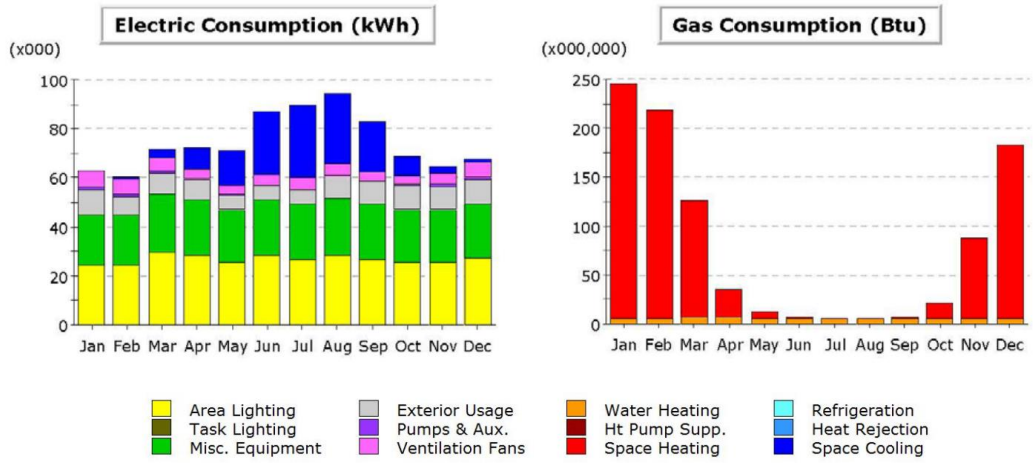

Figure 6.2: eQuest Baseline Annual Energy Usage

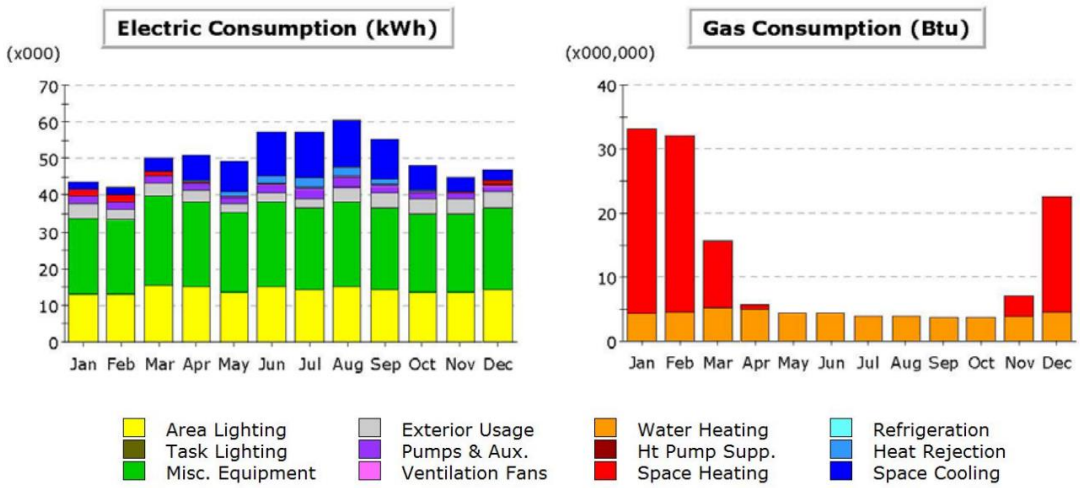

Figure 6.3: eQuest Total Proposed Annual Energy Usage

6.1 Interior LED Lighting

Meas. #	Measure Investment			Annual Savings			Simple Payback (years)
	(without rebate)	(w/rebate)	Utility Rebate	Utility	O&M	**Total**	
1	$ 113,950	$ 102,936	$ 11,014	$ 17,151	$ 5,145	**$ 22,296**	4.6

Current Condition: The baseline eQuest model utilizes 1.90 Watts per square foot which equates to the 53,200 square foot office building being lit by 32 Watt, T8 Linear fluorescent fixtures.

Proposed Solution: Plug Smart proposes installing LED interior light fixtures in all proposed offices, common areas, hallways, and restrooms. LED lights result in significant energy savings and longer lamp/fixture life while also improving CRI and providing less lumen depreciation over time. This scope includes LED exit signs.

Calculations: Savings were calculated by changing the baseline eQuest model from 1.90 Watts per square foot to 1.01 Watts per square foot.

$$Savings = \left(1.90\frac{W}{SF} - 1.01\frac{W}{SF}\right) x\ 53{,}200\ SF = 47{,}348\ kWh$$

Additional savings result from cooling savings and additional heating energy usage. Since LEDs give off less heat, the cooling system would not have to work as hard to cool the space; In turn, the heating system would have to provide more heat to the space. These savings were modeled by eQuest.

Savings:

ECM 1	Electricity Savings			Natural Gas Savings		O&M Savings	Total Savings	Carbon Offset Saved
	kWh	kW	$	mmBtu	$	$	$	(Tons CO_2)
Interior LED Lighting	**188,450**	**0**	**$ 18,770**	**-244.6**	**$ (1,619)**	**$ 5,145**	**$ 22,296**	**117**

6.2 Exterior LED Lighting

Meas. #	Measure Investment (without rebate)	Max (w/rebate)	Utility Rebate	Annual Savings Utility	O&M	Total	Simple Payback (years)
2	$ 54,143	$ 49,710	$ 4,433	$ 7,735	$ 2,320	**$ 10,055**	4.9

Current Condition: The baseline eQuest model utilizes 30.57 kW for the exterior lighting power draw. This equates to metal halide pole lights, bollards, floodlights, and wallpacks which is the current state at 350 W. Wilson Bridge Road as shown in Figure 6.4.

Figure 6.4: Existing Exterior Parking Lot Pole Lights

Proposed Solution: Plug Smart proposes replacing all exterior lighting with LED. The existing poles can be retrofitted with LED heads. Bollards and floodlights will be replaced with new fixtures. A summary of proposed LED fixtures is shown in Appendix B.

Calculations: Savings were calculated by changing the baseline eQuest model from 30.57 kW to 12.84 kW; 12.84 kW equates to all new LED exterior fixtures operating at an estimated 4,380 hours per year. The following equation shows how savings were calculated. Based on previous experience, we estimate the operating and maintenance savings would be about 30% of the utility savings.

$$(30.57\ kW - 12.84\ kW) \times 4{,}380 \frac{hours}{year} = 77{,}657 \frac{kWh}{year}$$

Savings:

ECM 2	Electricity Savings kWh	kW	$	Natural Gas Savings mmBtu	$	O&M Savings $	Total Savings $	Carbon Offset Saved (Tons CO_2)
Exterior LED Lighting	**77,657**	**0**	**$ 7,735**	**0.0**	**$ -**	**$ 2,320**	**$ 10,055**	**54**

6.3 HVAC Upgrade

Meas. #	Measure Investment (without rebate)	Max (w/rebate)	Utility Rebate	Annual Savings Utility	O&M	Total	Simple Payback (years)
3	$ 79,988	$ 57,466	$ 22,521	$ 11,427	$ 3,428	**$ 14,855**	3.9

Current Condition: The baseline model air side HVAC system includes RTUs equipped with DX coils for cooling and natural gas fired heating. We estimate the baseline RTUs have an EER of 8.5 and are about 80% efficient on heating. The existing model has a static pressure of 1.25" WG. The baseline model is shown in Figure 6.5.

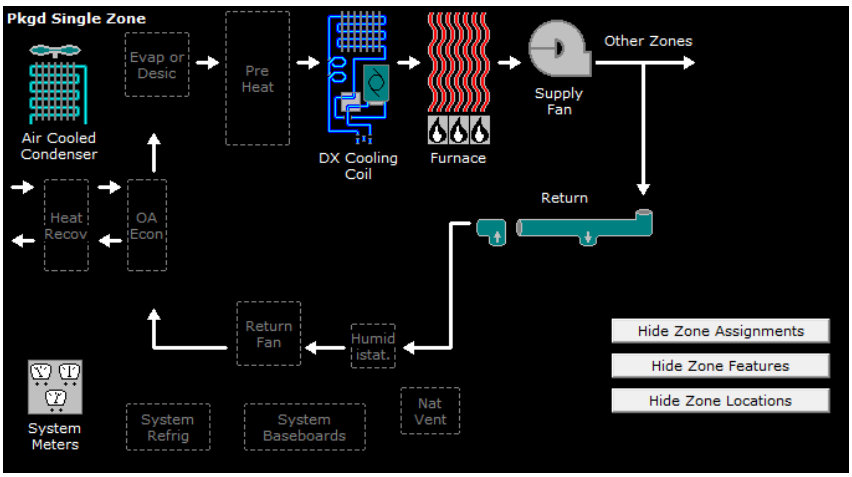

Figure 6.5: Air-side HVAC Baseline RTU Model

Proposed Solution: Install 24 water source heat pumps to distribute heating and cooling. The water source heat pumps are to be served by two 90% efficient, 1400 MBH condensing boilers and a 15 hp, 70 ton dedicated outdoor air unit with EER of 9.5. The system will also utilize existing building fluid cooler. For cooling, supply air volume (cfm) was sized based on a 53 °F supply air temperature and a 73 °F space temperature setpoint. For heating, supply air volume (cfm) was sized based on a 90 °F supply air temperature and a 70 °F space temperature setpoint. Heat pumps are specified to be of brand Bulldog; efficiencies for proposed units are shown in Figure 6.6.

	Model No.	Quantity	Size (tons)	EER
HP-1	SKH060	1	5.00	14.9
HP-2	SKH030	1	2.50	15.6
HP-X	SKH018	17	1.50	15.1
HP-29	SKH015	1	1.25	15.8
HP-30	SKH036	1	3.00	15.2
HP-31	SKH036	1	2.75	15.2
HP-32	SKH030	1	2.50	15.4
HP-33	SKH015	1	1.25	15.8

Figure 6.6: Summary of Proposed Water-Source Heat Pumps

The proposed model is shown in Figure 6.7.

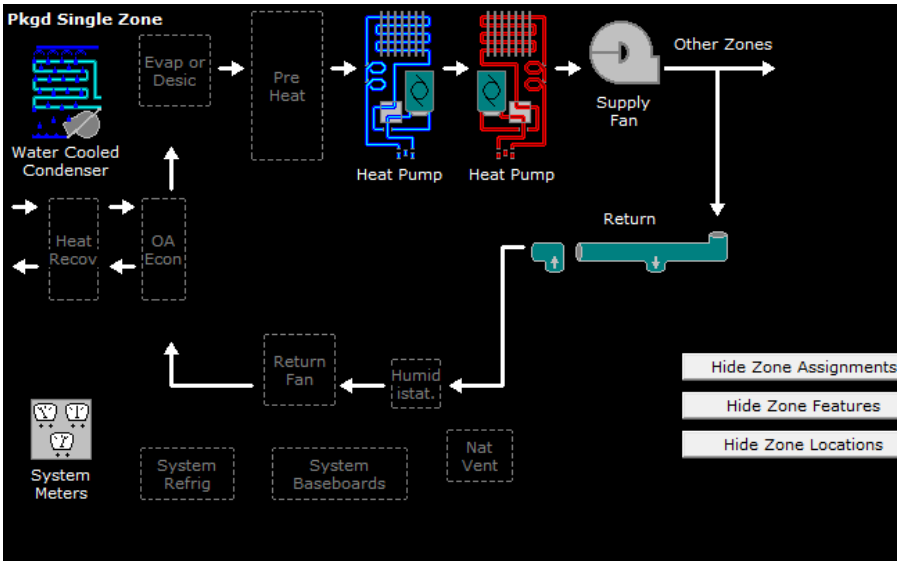

Figure 6.7: Air-side HVAC Proposed Heat Pump Model

Calculations: Savings were calculated by altering the baseline eQuest model's airside HVAC system to the proposed solution. The results from the baseline eQuest model are shown in Figure 6.8. The results from the baseline eQuest model with the proposed HVAC system are shown in Figure 6.9.

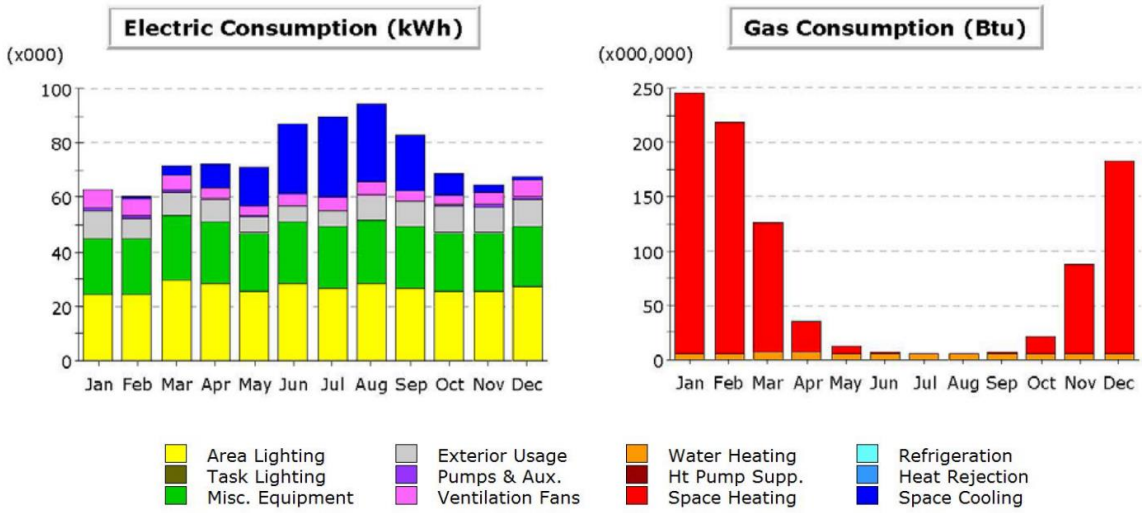

Figure 6.8: eQuest Baseline Annual Energy Usage

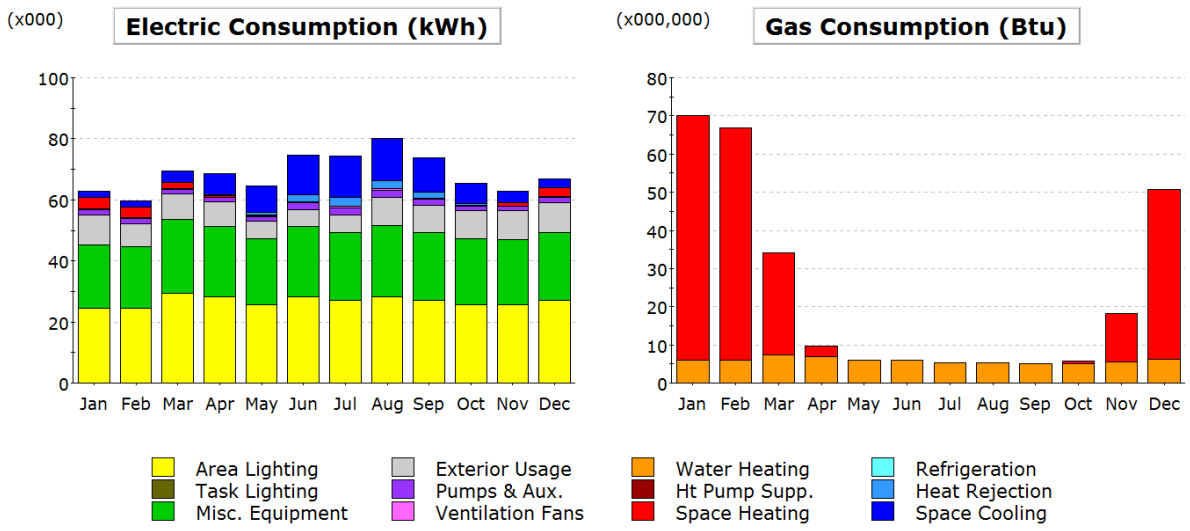

Figure 6.9: eQuest Proposed Annual Energy Usage with HVAC Upgrades

Savings:

ECM 3	Electricity Savings			Natural Gas Savings		O&M Savings	Total Savings	Carbon Offset Saved
	kWh	kW	$	mmBtu	$	$	$	(Tons CO_2)
HVAC Upgrade	70,030	0	$ 6,975	672.5	$ 4,452	$ 3,428	$ 14,855	84

6.4 Domestic Hot Water Heater Update

Meas. #	Measure Investment (without rebate)	Max (w/rebate)	Utility Rebate	Annual Savings Utility	O&M	Total	Simple Payback (years)
4	$ 576	$ 576	$ -	$ 82	$ 25	**$ 107**	5.4

Current Condition: The existing domestic hot water heater was modeled to be a 150 gallon, natural gas fired, non-condensing water heater at about 80% efficiency. The baseline model is shown in Figure 6.10.

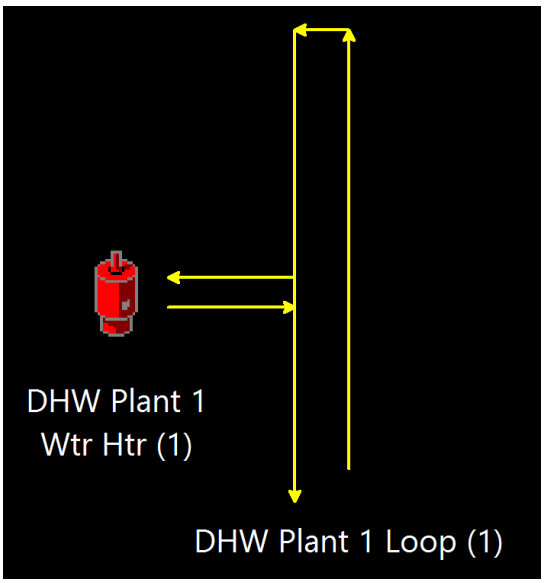

Figure 6.10: Baseline Water-side HVAC Model

Proposed Solution: Plug Smart proposes installing two 100 gallon, natural gas fired, condensing, modulating, programmable water heater which would achieve about 97% efficiency. The domestic hot water heaters shall be located in the basement and will serve the whole building. The proposed system as modeled in eQuest is shown in Figure 6.11.

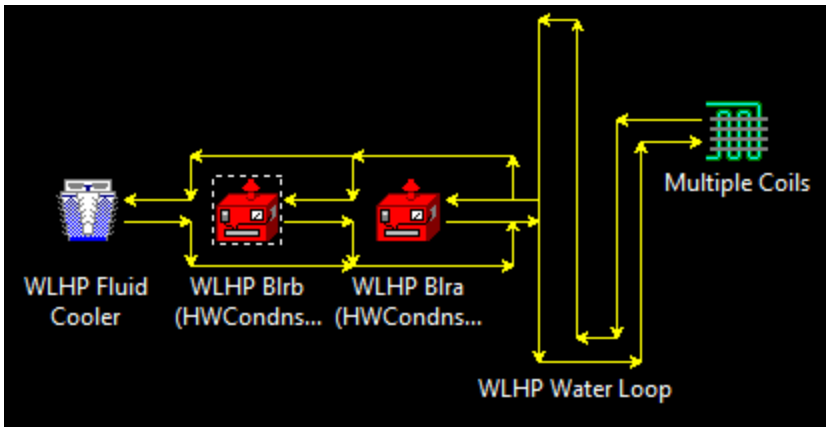

Figure 6.11: Proposed Water-side HVAC Model

Calculations: Savings were calculated by altering the baseline eQuest model's hot water heater system to the proposed solution. Savings would result from the efficiency increase of 80% to 97%.

Savings:

ECM 4	Electricity Savings			Natural Gas Savings		O&M Savings	Total Savings	Carbon Offset Saved
	kWh	kW	$	mmBtu	$	$	$	(Tons CO_2)
DHW Upgrade	**0**	**0**	**$ -**	**12.4**	**$ 82**	**$ 25**	**$ 107**	**1**

6.6 Envelope Upgrades

Meas. #	Measure Investment			Annual Savings			Simple Payback (years)
	(without rebate)	Max (w/rebate)	Utility Rebate	Utility	O&M	**Total**	
5	$ 51,344	$ 51,344	$ -	$ 1,035	$ 310	**$ 1,345**	38.2

Current Condition: The baseline eQuest model was modeled with existing R-16 roof, R-8 walls, and R-2 windows with 0.35 Solar Heat Gain Coefficient (SHGC). SHGC is a measure of solar radiation that enters the building through windows. Significant energy savings exist from increasing insulation R-values and SHGC of windows. The baseline model is shown in Figure 6.12. Renovating the space provides a perfect opportunity to improve the R-values of the walls and roof.

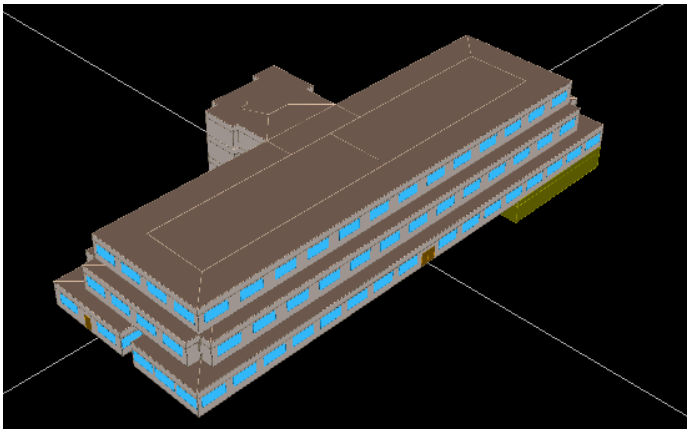

Figure 6.12: Baseline eQuest Model

Proposed Solution: Plug Smart proposes adding roof and wall insulation to increase R-values to R-23 and R-17, respectively. Also, replacing windows to increase the R-value from R-3 to R-3 and increase the SHGC from 0.35 to 0.74. The proposed windows would also be less area than the existing windows. The proposed model is shown in Figure 6.13.

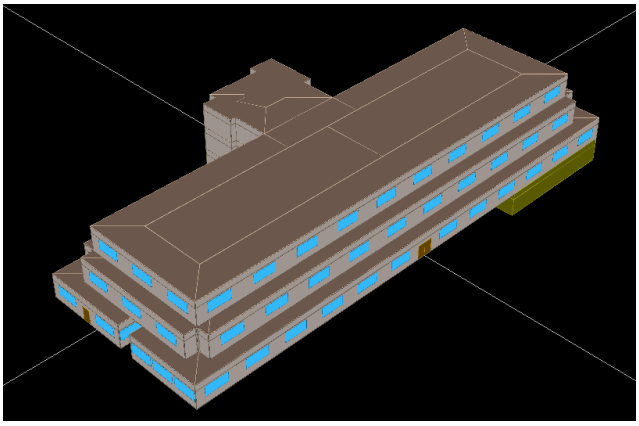

Figure 6.13: Proposed eQuest Model

Calculations: Savings were calculated by increasing the baseline eQuest model's roof and wall insulation. Savings also resulted from changing the layout of the windows in the proposed eQuest model as well as the R-value and SHGC.

Savings:

ECM 5	Electricity Savings			Natural Gas Savings		O&M Savings	Total Savings	Carbon Offset Saved
	kWh	kW	$	mmBtu	$	$	$	(Tons CO_2)
Envelope Upgrade	**-21,550**	**0**	**$ (2,146)**	**480.5**	**$ 3,181**	**$ 310**	**$ 1,345**	**11**

Appendices

A. Glossary of Terms

ASHRAE American Society of Heating, Refrigerating and Air-Conditioning Engineers

ASHRAE Standard 90.1 2004 is a standard which provides minimum requirements for the energy-efficient design of buildings excluding low-rise residential buildings

BAS (Building Automation System) is a system of devices, sensors and programmable controllers that is utilized to control HVAC systems and can be used to control other building systems such as lighting.

BTU (British Thermal Unit) is a measure of energy. One BTU is the amount of energy it takes to raise the temperature of 1 pound of water, 1 degree Fahrenheit at or near 39.2 degrees F and 1 atmosphere of pressure.

BTUH (BTUs per hour) is a unit of power. 3,412 BTUH equals 1 kilowatt.

CCF is a unit of volume, typically of natural gas. One CCF equals 100 cubic feet.

COP (Coefficient of Performance) a rating of efficiency that is the ratio of heating or cooling provided by a heat pump (or other refrigeration machine) to the energy consumed by the system under designated operating conditions (See Eq. 1 below).

$$COP = \frac{12}{(3.412 X kW/\ ton)} = \frac{EER}{3.412}$$

Equation 1

DCV Demand Control Ventilation is an energy conservation strategy that reduces the minimum outside air ventilation set point based on actual occupancy as indicated by a carbon dioxide sensor.

DOE Department of Energy

ECM (Energy Conservation Measure) A recommended replacement, retrofit or policy change that will not negatively affect operation but will save energy

EER (Energy Efficiency Ratio) a rating of efficiency that is the ratio of heating or cooling provided by a heat pump (or other refrigeration machine) to the energy consumed by the system under designated operating conditions (See Eq. 2 below).

$$EER = \frac{12}{kW/\ ton} = 3.412\ (COP)$$

Equation 2

EUI (Energy Use Intensity) is the total energy usage of a building per square foot, commonly presented as BTU/ft2.

GSA General Services Administration

GSF Gross Square Footage

HVAC Heating, Ventilation and Air-Conditioning

kW (kilowatt) is a unit of power, commonly used to express a buildings electrical consumption. One kilowatt is equal to 1,000 watts and 3,412 BTUH.

kWh (Kilowatt-hour) is a measure of energy, defined as the consumption of one kilowatt in one hour. One kilowatt-hour is equal to 3,412 BTUs.

kW/ton (Kilowatt per ton) is a rating of efficiency that is the ratio of energy consumed by a heat pump (or other refrigeration machine), in kW, to the heating or cooling provided.

The lower the kW/ton the more efficient the system (See Eq. 3 below).

$$kW/ton = \frac{12}{EER} = \frac{12}{3.412\ (COP)}$$

Equation 3

Latent Heat is the amount of heat absorbed or released by a substance undergoing a change of state but not temperature.

Lighting Power Density is a measurement of power used for lighting, in an area, per the square footage that area, commonly presented in W/ft2.

MCF is a unit of volume, typically of natural gas. One MCF equals 1,000 cubic feet.

PPH (Pounds per Hour) is a mass flow rate commonly used to quantify steam usage.

Sensible Heat is the heat that can be felt and measured by a thermometer.

T5 is a high efficient, high output fluorescent lamp that measures 5/8" in diameter.

T8 is a fluorescent lamp that measures 1" (8/8") in diameter.

T12 is a fluorescent lamp that measures 1 1/2" (12/8") in diameter.

Therm is a measure of energy. One therm equals 100,000 BTUs.

Ton is 12,000 BTU/h.

Ton-Hour is a mass flow rate commonly used for chilled water / refrigerant. One ton-hour equals 12,000 BTUs.

VAV (Variable Air Volume) is a type of air distribution system that varies the amount of air to save energy.

VFD (Variable Frequency Drive) is a control put on a motor to vary the speed of the fan to save energy.

W (Watt) is a unit of power. One kilowatts (kW) is equal to 1,000 watts.

B. Exterior Lighting Inventory

New	Quantity	Input Watts	Average Run Time (hrs/yr)
2L 336W LED 3000K	6	672	26,280
17W 42" LED bollard bronze	7	17	30,660
10W LED Flood Light Ground Mount	10	10	43,800
25W LED Flood Light narrow 3000K	2	25	8,760
25W LED Flood Light horizontal	1	25	4,380
1L 336W LED 3000K	1	336	4,380
LED Canopy Downlight	260	32	1,137,131